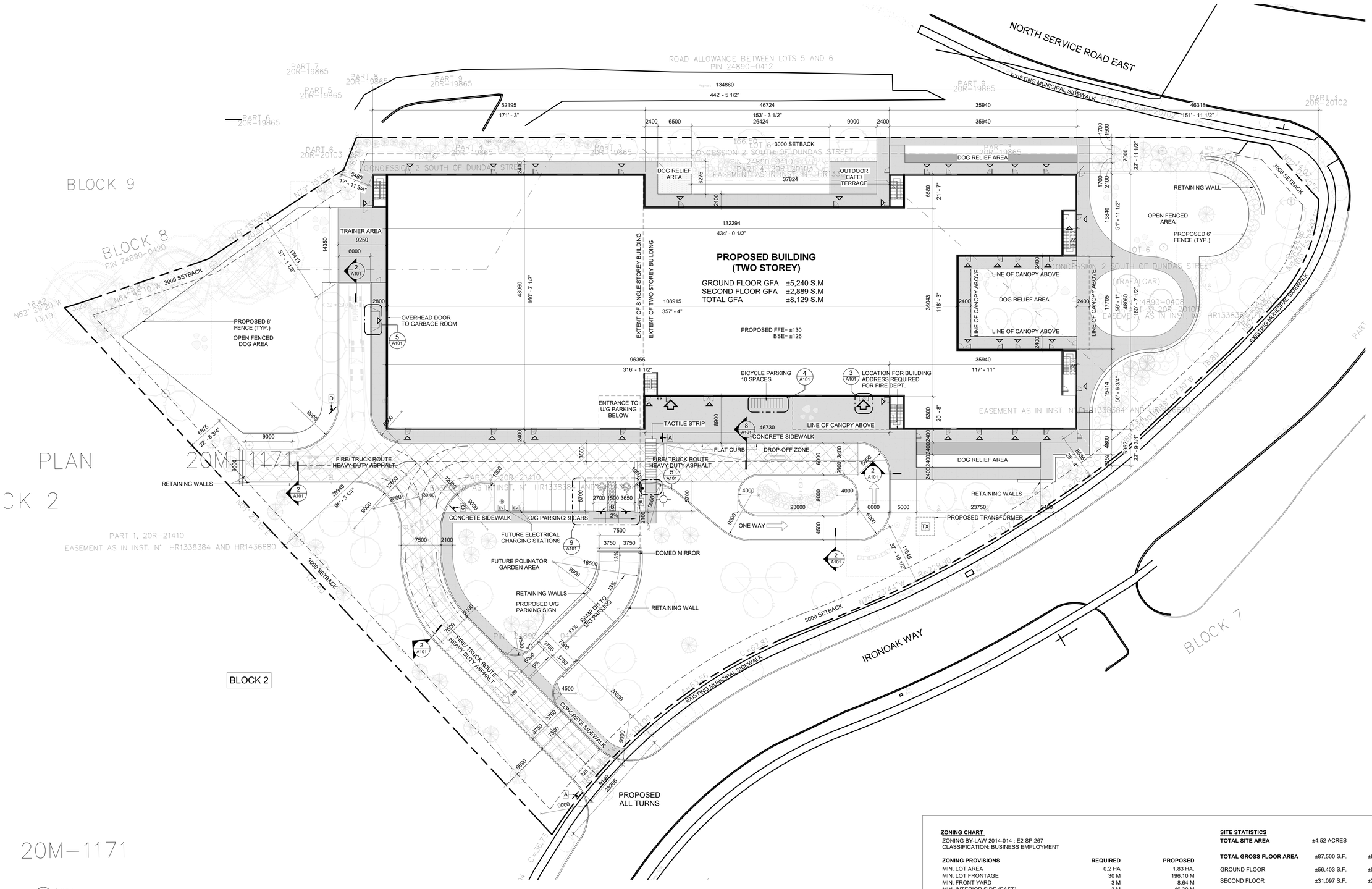

1 SITE PLAN
A100 1 : 250

ZONING CHART

ZONING BY-LAW 2014-014 : E2 SP:267
CLASSIFICATION: BUSINESS EMPLOYMENT

ZONING PROVISIONS	REQUIRED	PROPOSED
MIN. LOT AREA	0.2 HA	1.83 HA.
MIN. LOT FRONTAGE	30 M	196.10 M
MIN. FRONT YARD	3 M	8.64 M
MIN. INTERIOR SIDE (EAST)	3 M	46.30 M
MIN. INTERIOR SIDE (WEST)	3 M	5.48 M
MIN. REAR YARD	3 M	7 M
MAX. LOT COVERAGE	N/A	±28.65%
MIN. LANDSCAPING COVERAGE	10%	±59.19%
LANDSCAPED AREA		±10,941 S.M.
PAVED AREA		±2255 S.M. 12.16%
PARKING SPACE	2.7 M x 5.7 M	2.7 M X 5.7 M
PARKING AISLE	6 M	6 M
PARKING NUMBER	0	111
ACCESSIBLE PARKING SPACE	TYPE A 3.65 M X 5.7M TYPE B 2.7 M X 5.7 M ACCESS AISLE 1.5 M	TYPE A 3.65 M X 5.7M TYPE B 2.7 M X 5.7 M ACCESS AISLE 1.5 M
ACCESSIBLE PARKING NUMBER	2 SPACES (1 TYPE A + 1 TYPE B)	2 SPACES O/G (3 TYPE A + 3 TYPE B)
(2% OF THE TOTAL NUMBER OF PARKING SPACES IN THE PARKING AREA)		7 SPACE U/G (4 TYPE A + 3 TYPE B)
BIKE PARKING NUMBER	N/A	10

SITE STATISTICS

TOTAL SITE AREA	±4.52 ACRES	1.83 HA.
TOTAL GROSS FLOOR AREA	±87,500 S.F.	±8,129 S.M.
GROUND FLOOR	±56,403 S.F.	±5,240 S.M.
SECOND FLOOR	±31,097 S.F.	±2,889 S.M.

PARKING PROVIDED

U/G PARKNIG		102
O/G PARKING		9
TOTAL PARKING PROVIDED		111
	N/A	1.34/ 100 S.M.

LOT COVERAGE ±28.65%

TURNER FLEISCHER

Turner Fleischer Architects Inc.
67 Lesmill Road
Toronto, ON, M3B 2T8
T 416 425 2222
turnerfleischer.com

This drawing, as an instrument of service, is provided by and is the property of Turner Fleischer Architects Inc. All rights including copyright are retained by Turner Fleischer Architects Inc. Contractors shall verify and take responsibility for all dimensions on site and must notify Turner Fleischer Architects Inc. of any variations from the supplied information. This drawing is not to be scaled. The architect is not responsible for the accuracy of any information regarding adjacent properties, including but not limited to property lines, which is the appropriate consultant's drawings before proceeding with the work. Construction must conform to all applicable codes and requirements of authorities having jurisdiction. The contractor working from drawings and specifications issued for construction shall assume full responsibility and bear costs for any corrections or damages resulting from his work.

The site plan prepared by Turner Fleischer is reliant on a legal survey showing the boundaries of the lands together with the current location of any existing buildings, features or encroachment prepared by Cunningham McConnel Limited, dated 2019-06-24 as provided by the client.

LEGEND

- PROPOSED ENTRANCE ARROW
- PROPOSED EXIT ARROW
- PROPOSED FIRE HYDRANT
- PROPOSED SIAMESE CONNECTION
- PROPOSED SIGN
- PROPOSED FIRE & TRUCK ROUTE (HEAVY DUTY ASPHALT)
- PROPOSED CONCRETE SIDEWALK
- PROPOSED ASPHALT STRIP

#	DATE	DESCRIPTION	BY
20	2021-07-30	ISSUED FOR SPA	LBD
19	2021-07-26	ISSUED FOR COORDINATION	LBD
18	2021-07-22	ISSUED FOR COORDINATION	LBD
17	2021-07-20	ISSUED FOR COORDINATION	LBD
16	2021-06-11	ISSUED FOR COORDINATION	LBD
15	2021-06-04	ISSUED FOR REVIEW	LBD
14	2021-05-31	ISSUED FOR COORDINATION	LBD
13	2021-05-17	ISSUED FOR COORDINATION	LBD
11	2021-05-06	ISSUED FOR COORDINATION	LBD
10	2021-05-04	ISSUED FOR COORDINATION	LBD
9	2021-05-03	ISSUED FOR REVIEW	LBD
8	2021-04-22	ISSUED FOR COORDINATION	LBD
7	2021-03-11	ISSUED FOR CONSULTANTS COORDINATION	LBD
6	2021-03-10	ISSUED FOR REVIEW	LBD
5	2021-03-03	ISSUED FOR REVIEW	LBD
4	2021-02-26	ISSUED FOR REVIEW	LBD
3	2021-02-24	ISSUED FOR REVIEW	LBD
2	2021-02-23	ISSUED FOR REVIEW	LBD
1	2021-02-17	ISSUED FOR REVIEW	LBD

ARTISTREE CONSTRUCTION

PROJECT
1933 IRON OAK WAY, OAKVILLE, ON

1933 IRON OAK WAY
OAKVILLE, ON

DRAWING
SITE PLAN

PROJECT NO.	20.210CS
PROJECT DATE	2021-07-30
DRAWN BY	LBD
CHECKED BY	JBE
SCALE	As indicated
DRAWING NO.	A100
REV.	20

2021-07-30 5:48:28 PM

1 KEY PLAN
A101 1 : 5000

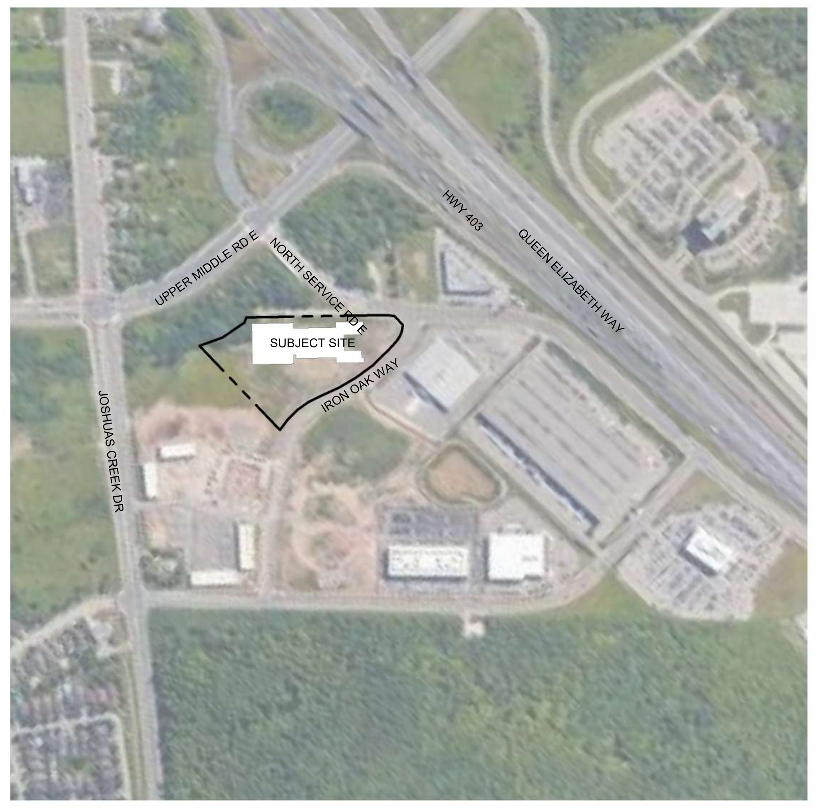

2 CONCRETE CURB SECTION
A101 1 : 10

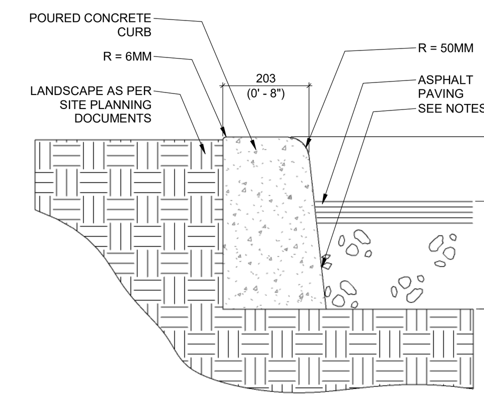

NOTES:

1.TREATMENT AT ENTRANCES SHALL CONFORM WITH OPSD-351.01
2.OUTLET TREATMENT SHALL CONFORM WITH OPSD-610 SERIES
3. THE LENGHT OF TRANSITION FROM ONE CURB TYPE TO ANOTHER SHALL BE 3.0M, EXCEPT IN CONJUNCTION WITH GUIDE RAIL, IT SHALL CONFORM TO OPSD-900 SERIES

3 FROST SLAB DETAIL
A101 1 : 50

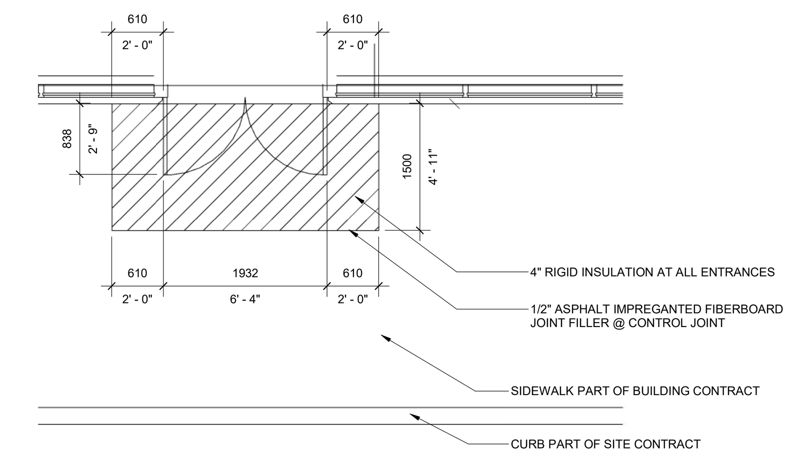

4 BIKE RACK DETAIL
A101 1 : 20

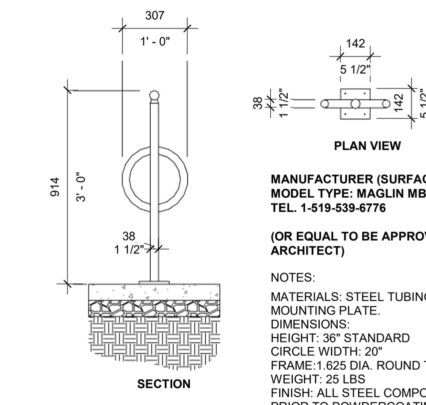

MANUFACTURER (SURFACE):
MODEL TYPE: MAGLIN MBR 100 BIKE RACK
TEL. 1-519-539-6776

(OR EQUAL TO BE APPROVED BY LANDSCAPE ARCHITECT)

NOTES:
MATERIALS: STEEL TUBING (1.6" DIA.) AND FLATBAR MOUNTING PLATE.
DIMENSIONS:
HEIGHT: 36" STANDARD
CIRCLE WIDTH: 20"
FRAME:1.625 DIA. ROUND TUBING
WEIGHT: 25 LBS
FINISH: ALL STEEL COMPONENTS ARE RUSTPROOFED PRIOR TO POWDERCOATING.
INSTALLATION: MAY BE SET IN CONCRETE OR BOLTED DOWN TO SURFACE WITH AN OPTIONAL MOUNTING PLATE.

5 CURB RAMP WITH TACTILE PLATES
A101 1 : 50

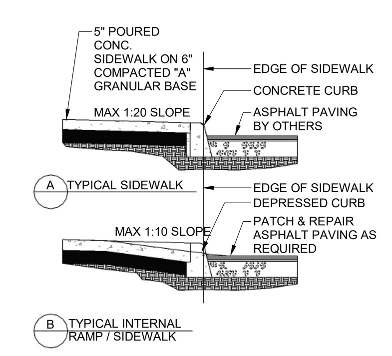

GENERAL NOTES:

G1. SIDEWALK SLOPES TO BE 1/8" / FT. (1%) MAX. IN ALL DIRECTIONS ALONG STOREFRONT, 1/4"/FT. (2%) MAX. IN OTHER AREAS.
G2. EXPANSION JOINTS ARE TO BE AS SPECIFIED & AS LOCATED ON ARCHITECTURAL DOCUMENTS.
G3. REINFORCING TO BE AS PER STRUCTURAL DOCUMENTS.
G4. CONCRETE TO BE BROOM FINISHED AS PER ARCHITECTURAL SPECIFICATIONS.
G5. CONSTRUCTION OF CURB RAMPS TO BE IN ACCORDANCE WITH THE REQUIREMENTS IN PROVINCE OF ONTARIO - DESIGN OF PUBLIC SPACES STANDARD - PART IV.1 OF ONTARIO REGULATION 191/11. IT MUST HAVE TACTILE WALKING SURFACE INDICATORS THAT:

i) HAVE RAISED TACTILE PROFILES,
ii) HAVE A HIGH TONAL CONTRAST WITH THE ADJACENT SURFACE,
iii) ARE LOCATED AT THE BOTTOM OF THE CURB RAMP,
iv) ARE SET BACK BETWEEN 150mm AND 200mm FROM THE CURB EDGE,
v) EXTEND THE FULL WIDTH OF THE CURB RAMP, AND
vi) ARE A MINIMUM OF 610mm IN DEPTH

NOTES:
1. WHERE SIDEWALK IS CONTINUOUSLY ADJACENT , REDUCE THE DROPPED CURB AT ENTRANCES TO 3".
2. FOR SLIPFORMING PROCEDURE A 5% BATTER IS ACCEPTABLE.
A. TREATMENT AT ENTRANCES SHALL CONFORM WITH OPSD-351.01
B. OUTLET TREATMENT SHALL CONFORM WITH OPSD-610 SERIES
C. THE LENGTH OF TRANSITION FROM ONE CURB TYPE TO ANOTHER SHALL BE 3.0M , EXCEPT IN CONJUNCTION WITH GUIDE RAIL, IT SHALL CONFORM TO OPSD-900 SERIES

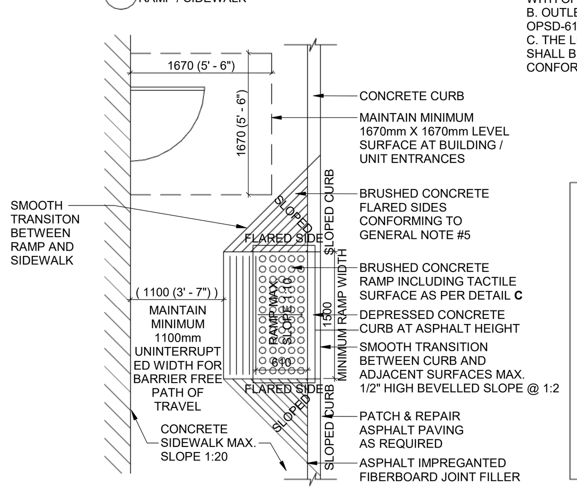

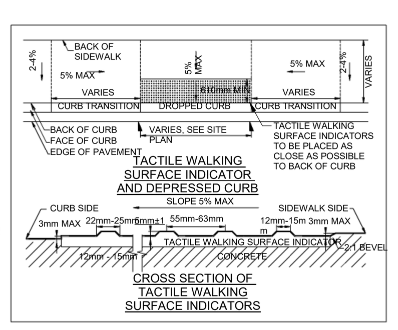

C DETAIL OF TACTILE SURFACE

6 LIGHTING STANDARD
A101 1 : 500

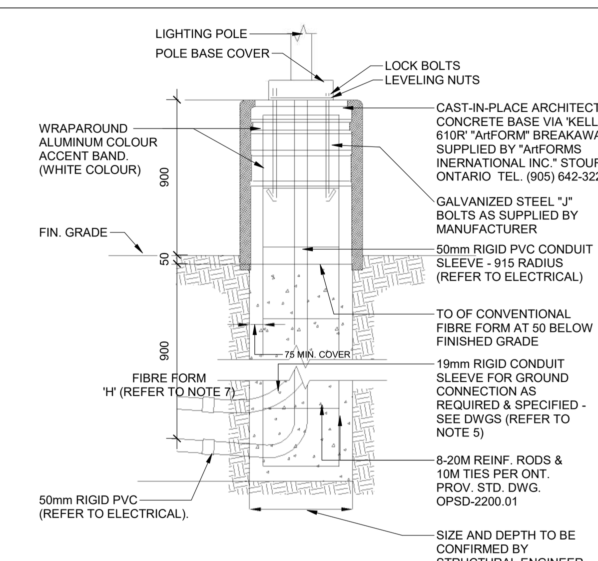

TYPICAL CONCRETE BASE FOR LUMINAIRE

NOTE:
CONCRETE BASES FOR LUMINAIRES TYPE "L1" L2A" & "L2B" TO BE SUPPLIED AND INSTALLED BY THIS ELECTRICAL CONTRACTOR.

NOTES:

1. ALL DIMENSIONS ARE IN MILLIMETERS OR METERS
2. TOP OF FOUNDATION SHALL BE TROWELLED SMOOTH & LEVEL.
3. CLASS OF CONCRETE SHALL BE 25mPa. CONCRETE SHALL BE VIBRATED.
4.MINIMUM OF TWO SLEEVES REQUIRED FOR EACH CONC. FOUNDATION UNLESS OTHERWISE SHOWN.
5. PROVIDE A 19 mm DIA. 3000mm STEEL COPPER COATED GROUND ROD ADJACENT TO POLES AS SPECIFIED ON PLAN AND CONNECT TO METAL POLE WITH BARE COPPER CONDUCTOR.
6. CONTRACTOR TO VERIFY OPENING SIZE IN POLE BASE PLATE PRIOR TO SETTING CONDUIT SLEEVES. CONTRACTOR TO PROVIDE STRUCTURAL ENGINEER APPROVAL FOR BASE DESIGN.
7. SUBJECT TO SOIL CONDITIONS, REFER TO SOIL REPORT.
8. FORM RELEASE AGENT HAS BEEN FACTORY-APPLIED TO INSIDE SURFACE OF "ArtFORM"

POLE LENGHT (M)	BASE BURIAL DEPTH (M)	REINF. ROD LENTGH (M)
3.0	1.50	1.35
5.6	2.15	2.00
7.0	2.15	2.00
7.5	2.15	2.00
8.7	2.45	2.30
9.0	2.45	2.30
10.5	2.60	2.45
12.0	2.75	2.60
13.6	2.90	2.75
15.1	3.05	2.90

7 ACCESSIBLE SIGN W/ BOLLARD DETAIL
A101 1 : 20

SYMBOL	SIGN	DESCRIPTION
A	STOP	"STOP" SIGN Ra-1 (600x600)mm WHITE REFL. LEGEND & BORDER, RED REFL. BACKGROUND
B	BY PERMIT ONLY	"ACCESSIBLE PARKING PERMIT" SIGN Rb-93 (300x450)mm RED REFL. INTERDICTORY SYMBOL, BLUE REFL. SYMBOL OF ACCESS & SYMBOL BORDER, BLACK SYMBOL, LEGEND & BORDER, WHITE REFL. BACKGROUND
C	FIRE ROUTE TOW AWAY ZONE ON DRIVEWAY	"FIRE ROUTE" SIGN (300x450)mm RED REFL. INTERDICTORY SYMBOL, BLACK SYMBOL, WHITE REFL. "FIRE ROUTE" ON BLACK BACKGROUND, BLACK LEGEND & BORDER,WHITE REFL. BACKGROUND
D	LOADING ZONE	"LOADING ZONE" SIGN (300x450)mm RED REFL. INTERDICTORY SYMBOL, BLACK SYMBOL, LEGEND & BORDER, WHITE REFL. BACKGROUND

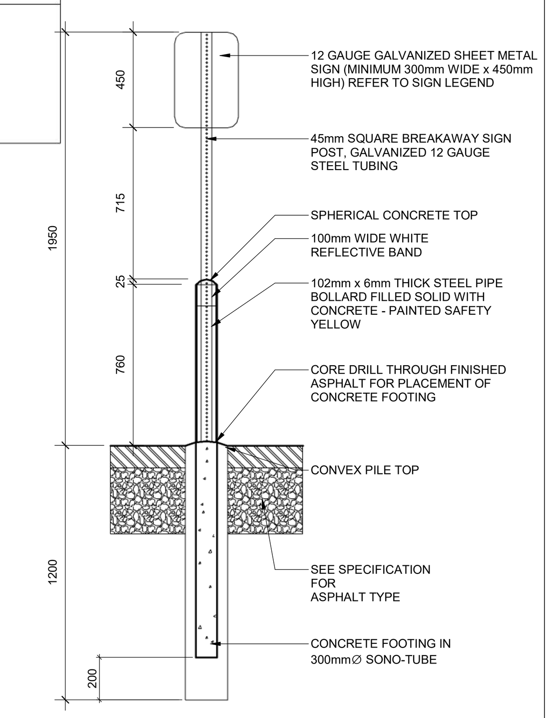

8 FLAT CURB DETAIL
A101 1 : 20

GENERAL NOTES:

G1. SIDEWALK SLOPES TO BE 1/8" PER FOOT (1%) MAX. IN ALL DIRECTIONS
ALONG STOREFRONT, 1/4" PER FOOT (2%) MAX. IN OTHER AREAS.
G2. EXPANSION JOINTS ARE TO BE BE AS SPECIFIED AND AS LOCATED ON
ARCHITECTURAL DOCUMENTS.
G3. REINFGORCING TO BE AS PER STRUCTURAL DOCUMENTS.
G4. CONCRETE TO BE BROOM FINISHED AS PER ARCHITECTURAL SPECIFICATIONS.

NOTES:
1. FOR SLIPFORMING PROCEDURE A 5% BATTER IS ACCEPTABLE.
A. TREATMENT AT ENTRANCES SHALL CONFORM WITH OPSD-351.01.
B. OUTLET TREATMENT SHALL CONFORM WITH OPSD-610 SERIES.
C. THE LENGTH OF TRANSITION FROM ONE CURB TYPE TO ANOTHER HALL BE 3.0M, EXCEPT IN CONJUNCTION WITH GUIDE RAIL, IT HALL CONFORM TO OPSD-900 SERIES.

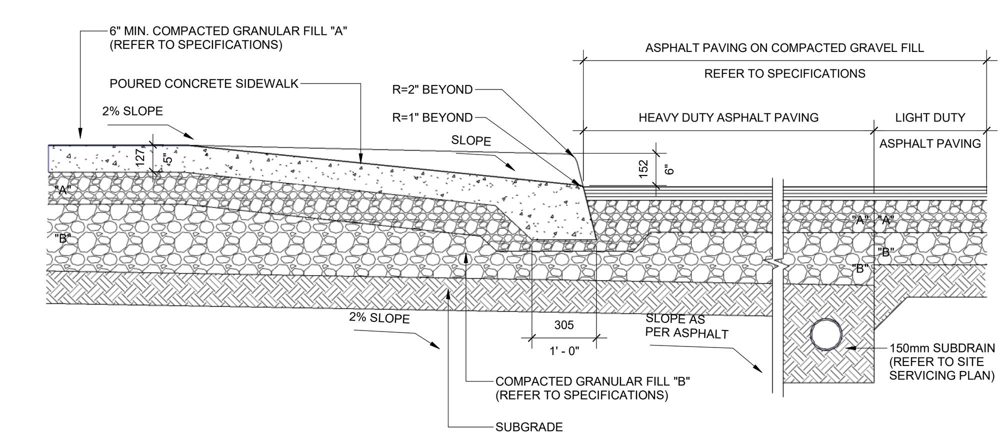

9 STANDARD PARKING DETAIL (AODA)
A101 1 : 100

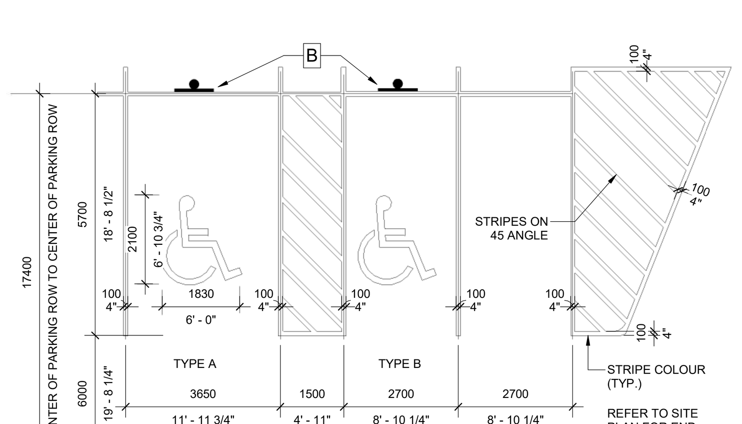

NOTES:

1. REFER TO SITE PLAN FOR SPECIFIC PROJECT SITE PLANNING DIMENSIONS.

2. ALL PARKING LOT LINE STRIPING TO BE PAINTED WITH PARA PAINT '8 MPI - YELLOW' OR EQUAL.

3. ALL PARKING DIMENSIONS SHOWN ARE MINIMUM. CONFIRM REQUIRED SIZES WITH LOCAL AUTHORITY HAVING JURISDICTION.

10 GUARDRAIL DETAIL
A101 1 : 20

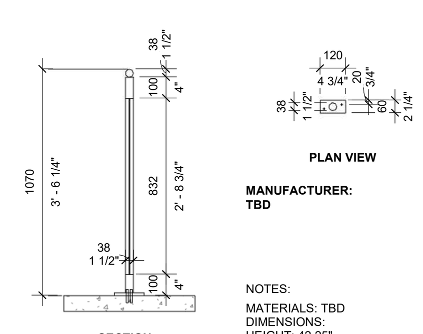

MANUFACTURER:
TBD

NOTES:
MATERIALS: TBD
DIMENSIONS:
HEIGHT: 42.25"
TUBE GUARDRAIL: 38mm DIA. (1.5")
FRAME: 38mm (1.5")
FINISH: TBD

TURNER FLEISCHER
Turner Fleischer Architects Inc.
67 Lesmill Road
Toronto, ON, M3B 2T8
T 416 425 2222
turnerfleischer.com

This drawing, as an instrument of service, is provided by and is the property of Turner Fleischer Architects Inc. The contractor must verify and accept responsibility for all dimensions and conditions on site and must notify Turner Fleischer Architects Inc. of any variations from the supplied information. This drawing is not to be scaled. The architect is not responsible for the accuracy of survey, structural, mechanical, electrical, etc., information shown on this drawing. Refer to the appropriate consultant's drawings before proceeding with the work. Construction must conform to all applicable codes and requirements of authorities having jurisdiction. The contractor working from drawings not specifically marked 'For Construction' must assume full responsibility and bear costs for any corrections or damages resulting from his work.

#	DATE	DESCRIPTION	BY
20	2021-07-30	ISSUED FOR SPA	LBD
16	2021-06-11	ISSUED FOR COORDINATION	LBD
14	2021-05-18	ISSUED FOR COORDINATION	LBD
5	2021-03-03	ISSUED FOR REVIEW	LBD
4	2021-02-25	ISSUED FOR REVIEW	LBD
3	2021-02-24	ISSUED FOR REVIEW	LBD
2	2021-02-23	ISSUED FOR REVIEW	LBD

PROJECT
1933 IRON OAK WAY, OAKVILLE, ON

1933 IRON OAK WAY
OAKVILLE, ON

DRAWING
SITE DETAILS

PROJECT NO. 20.210CS
PROJECT DATE 2021-07-30
DRAWN BY LBD
CHECKED BY GH
SCALE As indicated

DRAWING NO. A101
REV. 20

2021-07-30 12:32:24 PM